RM-012N

USB/RS-232 to RS-485/RS-422 Converter



TECHNICAL SPECIFICATION

Model	RM-012N-D	RM-012N-E	RM-012N-1
Power Supply	9-24VAC, 9-30VDC or Supply from USB*	9-24VAC, 9-30VDC	9-24VAC, 9-30VDC
Power consumption	3.5 VA		
Display	USB POWER LED	—	—
	RS-485 POWER LED		
	Tx LED		
	Rx LED		
Input	USB	RS-232	RS-485 or RS-422
Output	RS-485 or RS-422		
	Distance : Maximum 1.2 km.		
Communication	Baud Rate 1,200 to 115,200 bps.	Baud Rate 1,200 to 57,600 bps.	Baud Rate 1,200 to 57,600 bps.
	Support Device Node : 128 Node.		
Ambient operation	Temperature : -10 ˚C to 60 ˚C		
	Humidity : <85% RH Non-Condensing		
Ambient storage	Temperature : 0 ˚C to 80 ˚C		
	Humidity : <85% RH Non-Condensing		
Protection Degree	IP20		
Installation	Din rail		
Material	ABS-V0		
Size	23 x 113 x 110 mm.		
Weight	100 g.		

* RM-012N-D สามารถเลือกใช้ Power supply จาก USB หรือ Adaptor โดยการเลือก Dip Switch ที่ด้านหน้า

 Dip OFF.	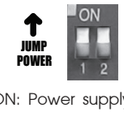 Dip ON.
Dip OFF: Power supply from Adaptor.	Dip ON: Power supply from USB.

DIMENSION &INSTALLATION

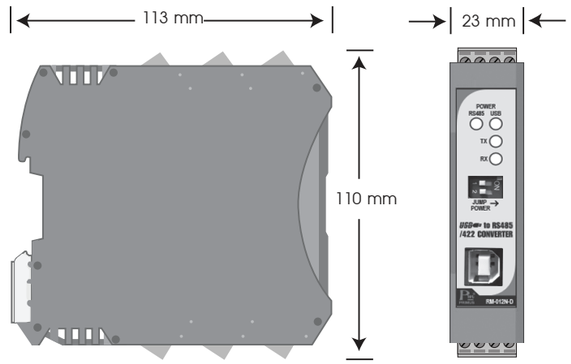

DESCRIPTION

- Device convert signal from USB to RS-485/RS-422 (RM-012N-D).
- Device convert signal from RS-232 to RS-485/RS-422 (RM-012N-E).
- RS-485/RS-422 (RM-012N-1) Signal repeater.
- Able to transmit signal far 1.2 km.
- Auto baud rate 1,200 to 115,200 bps.
  *Only model RM-012-D baud rate 1,200 to 115,200 bps.
  model RM-012-E and RM-012-1 baud rate 1,200 to 57,600 bps.
- LED show operation status
  - RS-485 Power LED: show power supply status in RS485/RS422 side.
  - USB Power LED: show power supply in USB side.
  - Tx LED: show status of data transmit from computer.
  - Rx LED: show status of data receive from computer.
- Adaptor 9VDC to supply power to RM-012N.
- Able to connect with device maximum 128 devices.
- *Only model RM-012-D is able to choose power supply from USB or Adapter by choose from Dip-SW at the front of device.

Operation

The device convert signal from USB/RS-232 to RS-485/RS-422.The device will be intermediary connect with industrial device that support RS-485/RS-422 such as PLC, CNC, Power meter etc.

And it has accessory in case user needs to communicate far distance more than 1.2 km for this application must use RM-012N-1 to be Repeater the RS-485/RS-422.

WIRING DIAGRAM

- RM-012N-D

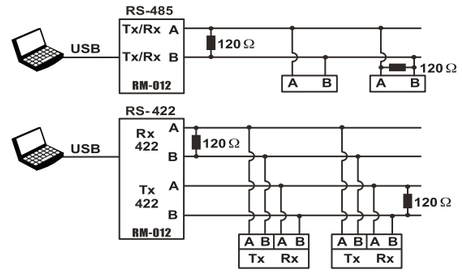

- RM-012N-E

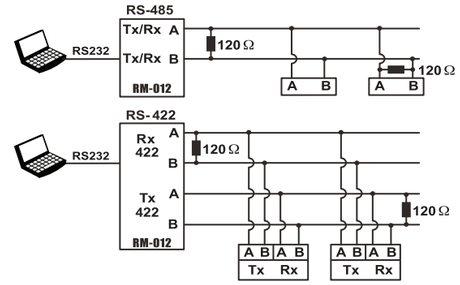

- RM-012N-1

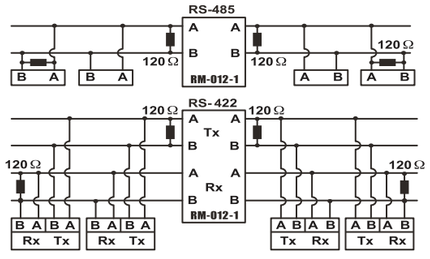

ORDERING CODE

RM-012N-[ ] (Model)

Code	Model
D	USB to RS-422/RS-485
E	RS-232 to RS-422/RS-485
1	RS-422/RS-485 Repeater

RM-012N-1 RM-012N-D RM-012N-E

บริษัท ไพรมัส จำกัด
119 ซ.สีม่วงอนุสรณ์ ถ.สุทธิสารวินิจฉัย แขวงดินแดง
เขตดินแดง กรุงเทพ 10400
โทร 0-2693-7005, 0-2277-8027 แฟ็กซ์ 0-2277-3565
E-mail : sales@primusthai.com