● SINGLE PHASE POWER METER

KM-09N-H

1 PHASE HERTZ METER

PRIMUS



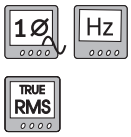

รอเบิกสินค้าถ่ายรูปใหม่

Description

- 1 Phase Volt Meter : KM-09N-V is a meter for measuring electrical frequency in a single-phase power system.
- Frequency measurement range: 45.0 – 200.0 Hz.
- TRUE RMS measurement provides high accuracy.
- Display with 7-Segment, 4 digits, 0.80-inch, 1 row.

Operation

KM-09N-H displays the electrical frequency value measured in real time and can display frequency values in the range of 45.0 to 200.0 Hz.

Specification

Power Supply		230VAC ±15 % 50-60Hz
Power Consumption		2.5VA
Display		7-Segment Size 0.8 Inch 4 Digit
Input	Voltage	Single Phase
	Phase Voltage (Vfull)	50 - 450VAC
	Frequency	45.0 - 200.0 Hz
	Accuracy Hz	± 0.2 Hz
Ambient Operation	Temperature	-10 °C to 60 °C
	Humidity	85 % RH Non-Condensing
Ambient Storage	Temperature	-20 °C to 80 °C
	Humidity	<75 % RH Non-Condensing
Protection Degree	Front Protection Rating	IP52
	Case Protection Rating	IP30
Installation		Panel, Mounting
Material		PC-ABS (UL94-V0)
Size (mm.)		96 x 96 x 80
Weight (kg.)		290

Wiring Diagram

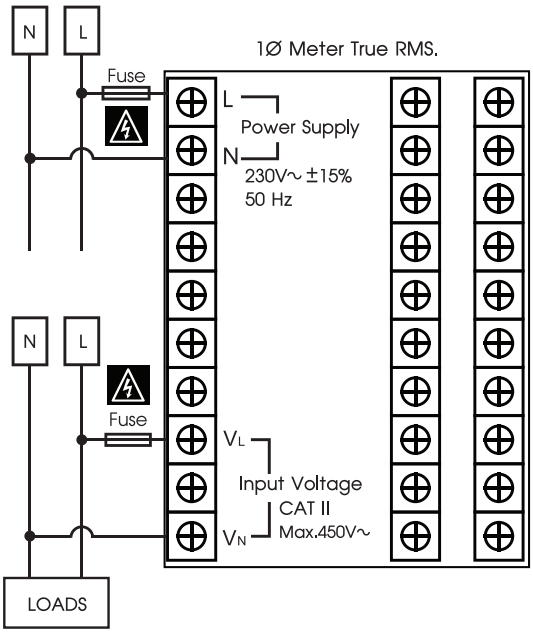

WARNING

- Make sure the correct wiring connection before turning on electricity. Mis-wiring may cause malfunction of the unit and fire.
- Never modify the unit to prevent damage or incident such as malfunction and fire etc.

Dimension

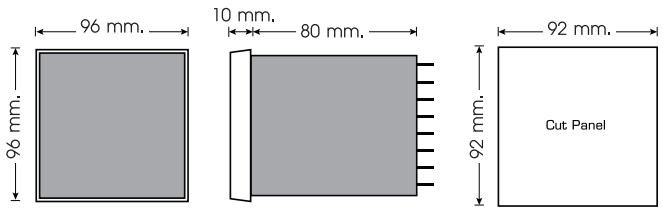

Installation

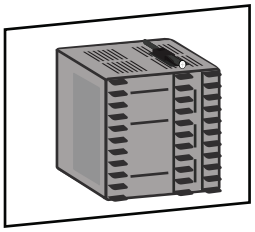

Ordering Code

KM - 09N - H