HM-N-SERIES

HUMIDITY & TEMPERATURE TRANSMITTER

PRIMUS

HM-004N, HM-005N

HM-006N

Description

- Humidity & Temperature Transmitter HM-N Series: Digital convertor temperature and humidity signals into a standard electrical output signal.
  - DC Current 4-20mA
  - DC Voltage 0-10VDC
  - DC Voltage 0-5VDC (For HM-004-03 only)
  - DC Voltage 1-3VDC (For HM-004-02 only)
  - RS-485 (Protocol RTU Modbus)
    Baud Rate : 4800, 9600, 19200, 38400 bps.
- Temperature range 0-100°C.
- Humidity Range 0-100% RH
- Suitable for ceiling or wall installation inside a room.
- Can be installed in dusty or humid areas.

Specification

Model		HM-004N				HM-005N		HM-006N-00
		HM-004N-00	HM-004N-01	HM-004N-03	HM-004N-02	HM-005N-00	HM-005N-01	
Power Supply		24VDC (15-30VDC)			8VDC	24VDC (15-30VDC)		
Power Consumption		<1 VA						
Input	Humidity	0-100% RH						
	Accuracy Humidity	±3% RH (0 - 80% RH)						
	Stability-RH Sensor	< 0.3% RH/yr						
	Temperature	0-100 ˚C	-			0-100 ˚C	-	0-100 ˚C
	Accuracy Temperature	±1 ˚C (20-60 ˚C)	-			±1 ˚C (20-60 ˚C)	-	±1 ˚C (20-60 ˚C)
	Stability-Temp Sensor	< 0.04 ˚C/yr	-			<0.04 ˚C/yr	-	<0.04 ˚C/yr
Output	DC current	-				4-20 mA Maximum 500Ω		-
	DC voltage	0-10 VDC Minimum 1 kΩ		0-5 VDC Minimum 1 kΩ	1-3 VDC Minimum 1 kΩ	-		-
RS-485 Communication	Protocol	-				-		MODBUS RTU
	Baud Rate	-				-		4800, 9600, 19200, 38400 bps
	Parity	-				-		None, Odd, Even
	Stop Bits	-				-		1, 2
	Data Bits	-				-		8 Bits
	Address	-				-		1-63
Ambient Operation	Temperature	-10 ˚C to 60 ˚C						
	Humidity	<85% RH Non-Condensing						
Ambient Storage	Temperature	-20 ˚C to 80 ˚C						
	Humidity	<85% RH Non-Condensing						
Protection Degree		IP55						
Installation		Screw						
Material	Housing	ABS.						
	Filter Head	polycabonate						
Size (mm.)		117 x 145 x 42						
Weight (kg.)		143						

Wiring Diagram

HM - 004N - 00

1 : +
2 : - Supply 24 VDC (15-30VDC)
3 : -
4 : - COM/GND
5 : Humidity 0-100% RH (0-10 VDC)
6 : Temp 0-100 °C (0-10 VDC)

HM - 004N - 01

1 : +
2 : - Supply 24 VDC (15-30VDC)
3 : -
4 : - COM/GND
5 : Humidity 0-100% RH (0-10 VDC)

HM - 004N - 02

1 : +
2 : - Supply 8 VDC
3 : -
4 : - COM/GND
5 : Humidity 0-100% RH (1-3 VDC)

HM - 004N - 03

1 : +
2 : - Supply 24 VDC (15-30VDC)
3 : -
4 : - COM/GND
5 : Humidity 0-100% RH (0-5 VDC)

HM - 005N - 00

1 : +
2 : - Supply 24 VDC (15-30VDC)
3 : -
4 : - COM/GND
5 : Humidity 0-100% RH (4-20 mA)
6 : Temp 0-100 C (4-20 mA)

HM - 005N - 01

1 : +
2 : - Supply 24 VDC (15-30VDC)
3 : -
4 : - COM/GND
5 : Humidity 0-100% RH (4-20 mA)

HM - 006N - 00

1 : +
2 : - Supply 24 VDC (15-30VDC)
3 : B
4 : A RS485

Dimension

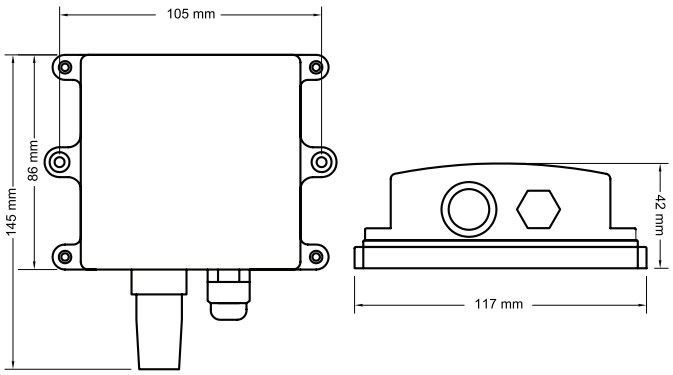

Order Coding

HM - [Output] - [Signal Input]

Output	
004N	DC Voltage : 0 - 10 VDC
005N	DC Current : 4 - 20 mA
006N	RS485 *(HM-006N-00 Only)

Signal Input	
00	Humidity & Temperature
01	Humidity
02	Humidity 1-3VDC (Output) *(HM-004N Only)
03	Humidity 0-5VDC (Output) *(HM-004N Only)