KM-20-SERIES

SINGLE PHASE VOLT-AMP METER WITH PROTECTION RELAY

PRIMUS

KM-20-P7

KM-20-P9

KM-20-DI

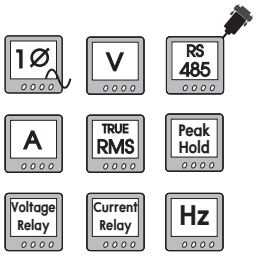

Specification

		KM-20-P7	KM-20-P9	KM-20-DI
Power Supply		230VAC ±15 % 50-60Hz		
		115VAC ±15 % 50-60Hz		
Power Consumption		2.5VA		
Display		7-Segment, Size 0.56 Inch, 4 Digit 2 Row		7-Segment, Size 0.39 Inch, 4 Digit 2 Row
Input	Voltage	Single Phase		
	Voltage Range	20-500 VAC		
	Accuracy Volt	±0.5% FS.		
	Current	Connection 1 CT, Direct		
	Current Transformer Ratio	1-2000		
	Primary	9999 AMP		
	Secondary	0.01-5A		
	Accuracy Current	±0.5% FS.		
Output	Relay Output	SPDT 2 Alarm 5A/250VAC, 5A 30VDC		
Communi-cation	Protocol	Modbus RTU		
	Baud Rate	2400, 4800, 9600, 19200, 38400, 57600, 115200bps		
	Parity	None, Even, Odd		
	Stop Bits	1, 2		
	Data Bits	8 Bits		
	Support Device Node	255		
Ambient Operation	Temperature	-10 ˚C to 60 ˚C		
	Humidity	85 % RH Non-Condensing		
Ambient Storage	Temperature	-20 ˚C to 80 ˚C		
	Humidity	85 % RH Non-Condensing		
Protection Degree		IP30		
Installation		Panel Mounting		DIN RAIL
Material		ABS-V0		
Size (mm.)		72 x 72 x 73	96 x 96 x 76.6	89.5 x 74.6 x 61.5
Weight (kg.)		280	300	280

Description

- Single Phase Volt-Amp Meter with Protection Relay : KM-20 is a meter for measuring voltage and current (Volt–Amp) with a built-in protection relay for single-phase power systems.
- Under and Over Voltage Protection Relay
- Under and Over Current Protection Relay
- Voltage measuring range: 20–500 VAC
- Current measuring range: 0.01–5 A, with a maximum display up to 9999 A via CT ratio range 1–2000 (10000/5A)
- RS-485 Modbus RTU Protocol
- LED indicators for output operation and peak values
- Fault display with memory
- Manual / Auto display for current and voltage values
- Peak Hold function for maximum voltage and current values

Operation

KM-20 is a device that measures and displays both voltage and current in a single unit. It is equipped with voltage protection relays and current relays to protect against undervoltage and overvoltage conditions. The unit can also store the maximum peak values of voltage and current, allowing these data to be used for system analysis and performance evaluation.

Voltage Protection Relay allows the user to set undervoltage and overvoltage thresholds in the range of 20–500 VAC, with an adjustable ON Delay Time before operation from 1 to 3600 seconds. Once activated, the relay continuously monitors the voltage condition; if the voltage falls below or rises above the preset values, the relay will turn OFF within an adjustable time of 0–3600 seconds, which can be set for fast or slow tripping as required, and the cause of the fault will be displayed on the screen. When the voltage returns to within the preset range, the relay will turn ON again after the preset ON Delay Time. After the KM-20 has tripped or the relay is OFF, the cause of the relay OFF can be reviewed on the display. The operating behavior of the Voltage Protection is illustrated in Graph 1.

Operation[Continue]

Figure 1 shows the operating characteristic of the Voltage Protection Relay.

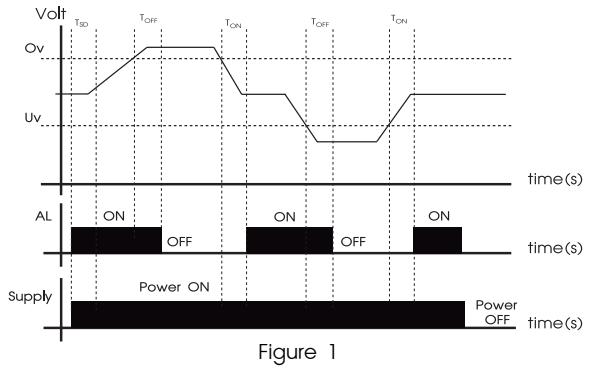

Figure 1

Current Protection Relay allows the user to set undercurrent or overcurrent thresholds in the range of 0.1–9999 A, with an adjustable ON Delay Time before operation from 1 to 3600 seconds. Once activated, the relay continuously monitors the current condition; if the current exceeds the preset value, the relay will turn OFF within an adjustable time of 0–3600 seconds, which can be set for fast or slow tripping as required, and the cause of the fault will be displayed on the screen. When the current level returns to below the preset value, the relay will turn ON again within 1–3600 seconds, or it can operate in the Inverse Function mode, where the relay will turn ON when the current exceeds the preset value. After the KM-20 has tripped or the relay is OFF, the cause of the relay OFF can be reviewed on the display.

When data transmission to a computer is required, communication can be performed via the RS-485 Modbus RTU protocol.

Figure 2 shows the operating characteristic of the Current Protection Relay.**

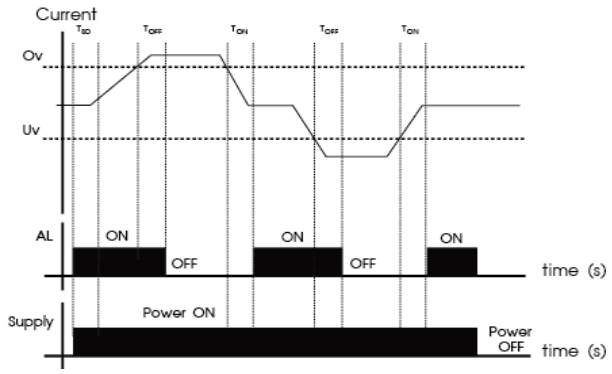

Figure 2

Figure 3 shows the standby sequence operation of the voltage protection.

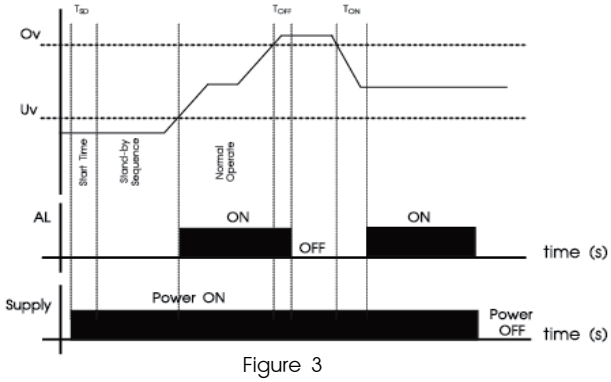

Figure 3

Wiring Diagram

KM-20-P7

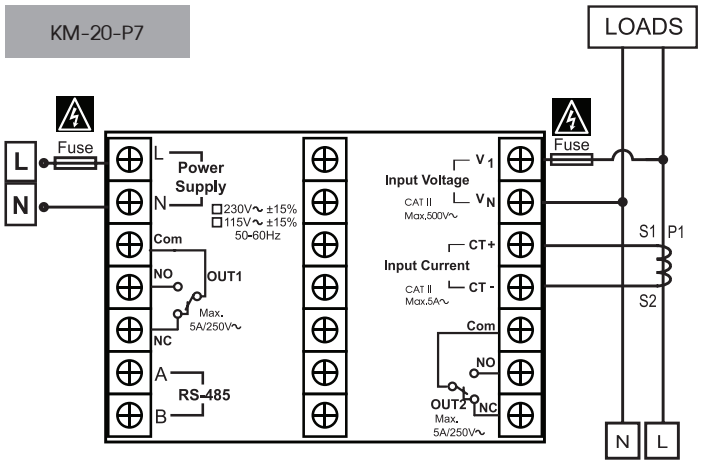

KM-20-P9

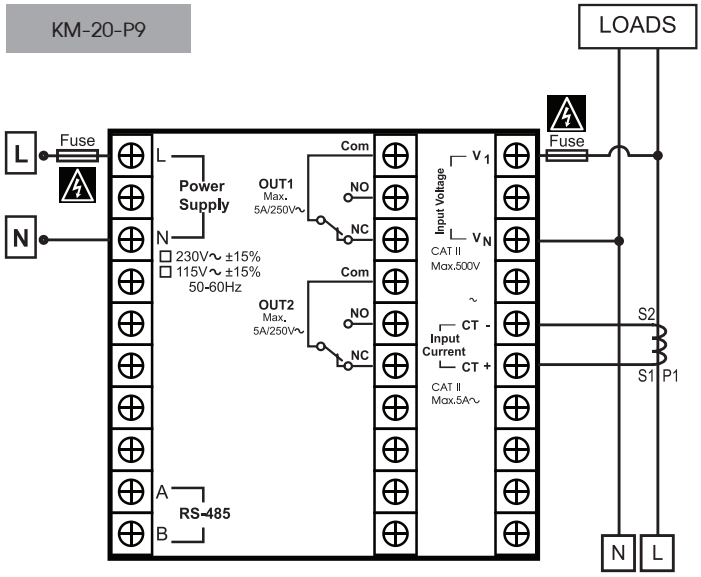

KM-20-DI

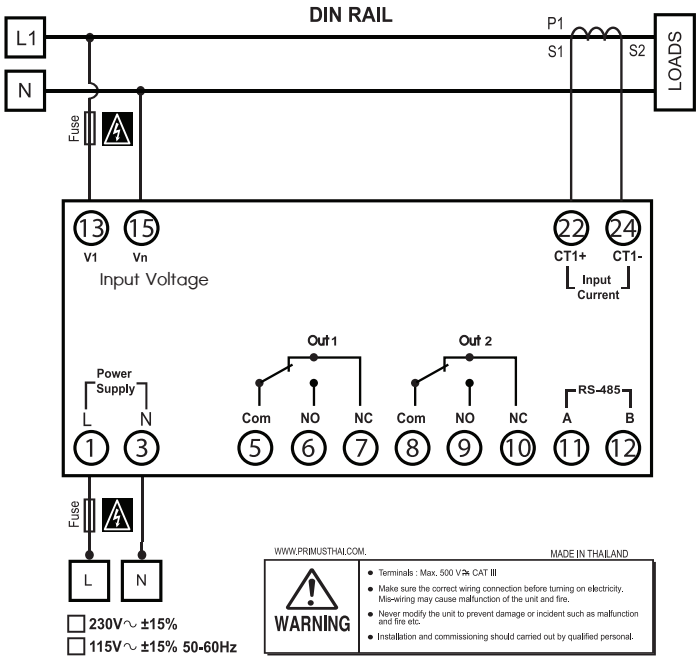

KM-20-SERIES

SINGLE PHASE VOLT-AMP METER WITH PROTECTION RELAY

PRIMUS

Dimension

KM-20-P7

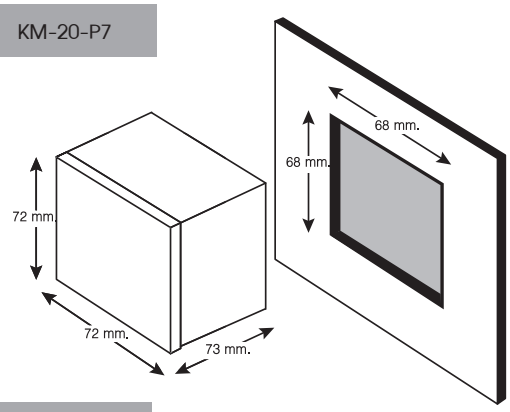

KM-20-P9

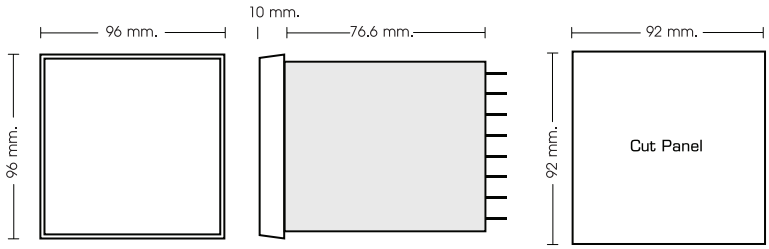

KM-20-DI

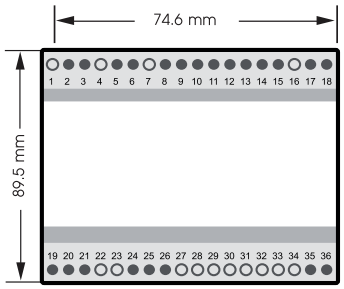

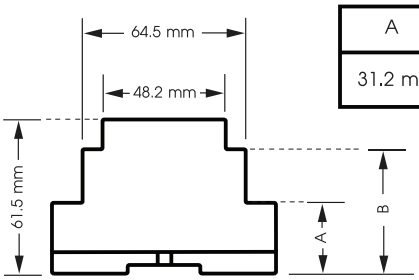

A	B
31.2 mm.	51 mm.

SERIAL COMMUNICATIONS

The KM-20 are Equipped With a RS-485 Series Communication Interface to Allow Connection to Computer or PLCs. MODBUS PROTOCOL is Provided as Standard Communication. The User Can Connect KM-20 as Network Up to 128 Meters.

Wiring Diagram

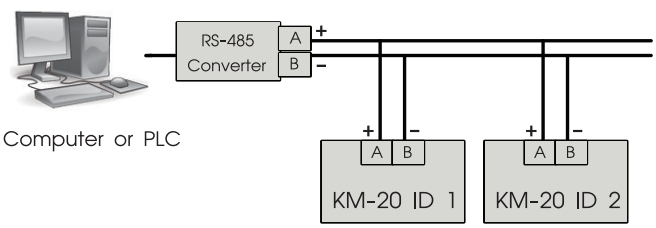

Ordering Code

KM-20- [ ] - A [ ] [ ] - [ ]

Installation | Option 1 | Power Supply

Installation	
DI	DIN RAIL
P7	Panel 72x72
P9	Panel 96x96

Option 1	
None	None
B	Alarm Relay 2 : Voltage and Current Protection Relay Function
M	RS-485

Code	Power Supply
NONE	230VAC
115	115VAC

<u>ตัวอย่าง :</u> KM-20-P9-ABM หมายถึง Volt, Amp Protection ขนาด 96x96 มี Alarm A, B มี Option RS-485 Supply 230 VAC