RM-012N-1

REPEATOR FOR RS-422/RS-485 CONVERTER



Specification

Power Supply		9-30 VAC/DC
Power consumption		3.5 VA
Display		RS-485 POWER LED
		Tx LED
		Rx LED
Input		RS-485 or RS-422
Output		RS-485 or RS-422
	Distance	Maximum 1.2 km.
Communi-cation	Baud Rate	57,600 bps.
	Support Device Node	128 Node
Ambient Operation	Temperature	-10 ˚C to 60 ˚C
	Humidity	85 % RH Non-Condensing
Ambient Storage	Temperature	-10 ˚C to 80 ˚C
	Humidity	85 % RH Non-Condensing
Protection Degree		IP20
Installation		DIN RAIL
Material		ABS-V0
Size (mm.)		113 x 23 x 110 mm.
Weight		100g.

Dimension

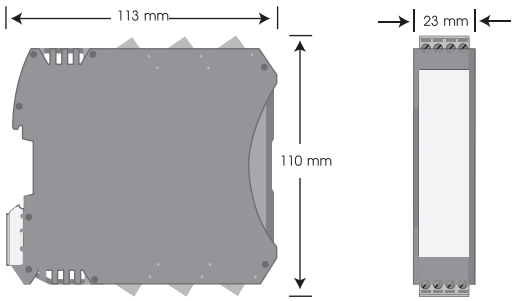

Description

- Repeater For RS-422/RS-485 Converter: The RM-012N-1 is a device designed to amplify and extend the transmission distance of RS-422/RS-485 signals by up to double the original range.
- Compatibility: Can be used in conjunction with RM-012N-D and RM-012N-E.
- Communication Speed: Auto Baud Rate with a maximum of 57.6 kbps.
- LED Status Indicators: Features LED indicators for RS-485, Tx, and Rx status.
- Power Supply: Includes a 9 VDC adapter to provide power to the RM-012N-1.

Operation

Repeater For RS-422/RS-485 Converter: The RM-012N-1 is a signal amplifier designed to double the transmission distance of RS-422 and RS-485 signals. This device is fully compatible with the RM-012N-D and RM-012N-E models, supporting an automatic baud rate with a maximum speed of 57.6 kbps. It features integrated LED indicators for monitoring RS-485, Tx, and Rx operational statuses and includes a 9 VDC adapter to provide the necessary power supply for the unit.

Wiring Diagram

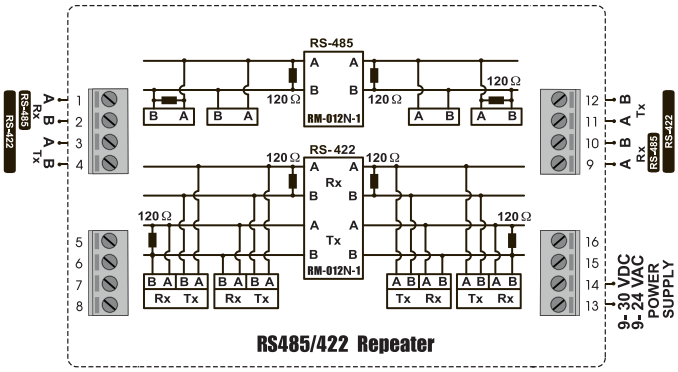

WARNING

- Make sure the correct wiring connection before turning on electricity. Mis-wiring may cause malfunction of the unit and fire.
- Never modify the unit to prevent damage or incident such as malfunction and fire etc.

Installation



DIN RAIL

Ordering Code

RM-012N- [Port: 1]

Port	
1	RS-422/RS-485 Repeater