

Description

- RS-232 to RS-422/RS-485 Converter: RM-012N-E is a device for converting signals from RS-422/RS-485 to RS-232, or from RS-232 to RS-422/RS-485.
- Supports long-distance signal transmission up to 1.2 km (RS-485).
- Auto baud rate communication, maximum 115.2 kbps.
- One RM-012N-E unit can be connected to up to 128 devices.
- LEDs indicate the operating status of RS-485, RS-232, Tx, and Rx.
- Includes a 9 VDC adapter to supply power to the RM-012N-E.

Specification

Power Supply		9-30 VAC/DC
Power consumption		3.5 VA
Display		RS-485 POWER LED
		Tx LED
		Rx LED
Input		RS-232
Output		RS-485 or RS-422
	Distance	Maximum 1.2 km.
Communi-cation	Baud Rate	1,200 to 115,200 bps.
	Support Device Node	128 Node
Ambient Operation	Temperature	-10 ˚C to 60 ˚C
	Humidity	85 % RH Non-Condensing
Ambient Storage	Temperature	-10 ˚C to 80 ˚C
	Humidity	85 % RH Non-Condensing
Protection Degree		IP20
Installation		DIN RAIL
Material		ABS-V0
Size (mm.)		113 x 23 x 110 mm.
Weight		100g.

Operation

RM-012N-E is a device for converting RS-485 and RS-422 to RS-232, allowing devices that support RS-485 or RS-422, such as controllers, CNC machines, and power meters, to communicate directly with computers, PLCs, and controllers via RS-232.

Wiring Diagram

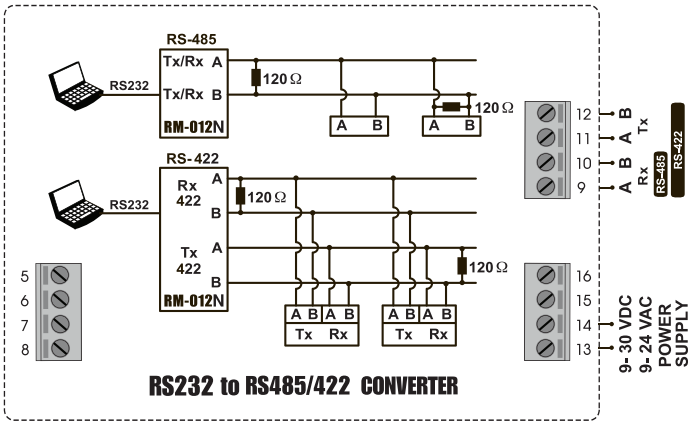

WARNING

- Make sure the correct wiring connection before turning on electricity. Mis-wiring may cause malfunction of the unit and fire.
- Never modify the unit to prevent damage or incident such as malfunction and fire etc.

Dimension

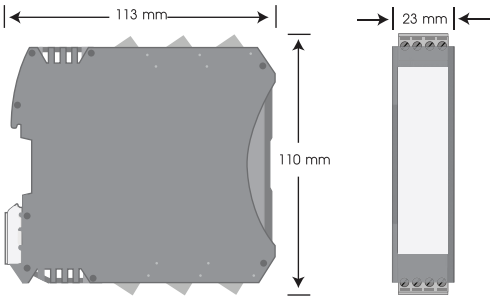

Accessories



RM-012N-1 : RS-422/RS-485 Repeater

- A device for extending the signal transmission distance to twice the original range.
- Baud Rate Max. 57.6 kbps.

Installation



Ordering Code

RM-012N- [Port: E]

Port	
E	RS-232 to RS-422/RS-485