SMW-SERIES

DIGITAL TIME SWITCH



Specification

Model		SMW 01-N1	SMW 02-N1	SMW 03-N1	SMW 04-N1
Power Supply		110-240VAC 50-60Hz			
Power Backup		Lithium (CR2032)			
Display		OLED Display 0.96 Inch			
Function	Weekly Program	ON-OFF (99 program/Channel)			
		Recycle (1 Program/Channel)			
	Holiday Program	30 Program			
	Summer Program	10 Program			
Output (Relay)		10A, 250V, SPDT		5A, 250V, SPDT	
Time Accuracy		⩽ ±2 Minute/Year			
Mode		Auto, Manual			
Number of Channels		1	2	3	4
Option		Configuration via SMW-A (WIFI)			
Ambient Operation	Temperature	-10°C to 60°C			
	Humidity	85 % RH Non-Condensing			
Ambient Storage	Temperature	-20°C to 80°C			
	Humidity	85 % RH Non-Condensing			
Protection Degree		IP20			
Installation		DIN Rail			
Material		ABS-V0			
Size (mm.)		40 x 90 x 62		89.5 x 74.6 x 64.5	
Weight (kg.)		120		175	

Description

- Digital Time Switch: SMW Series is a digital time switch for daily and weekly scheduling.
- The OLED display provides clear visibility.
- Time units can be set to seconds, minutes, hours, days, months, and years.
- 2 relay output functions are available:
  - ON/OFF Program: Up to 99 programs per relay output.
  - Recycle Program: Up to 1 program per relay output.
- Holiday programs can be set to disable relay output operation for up to 30 days.
- Summer programs can be set for continuous operation over multiple consecutive days, up to 10 date ranges.
- Electrical devices can be manually turned on and off at the desired time using the keypad.
- Easy installation on DIN rail.

Operation

Digital Time Switch: SMW Series is a digital time switch for daily and weekly scheduling, used for setting operating times. It is suitable for applications that require time-based control, allowing electrical devices to be turned on and off according to the desired schedule.

2 relay output functions are available:

- ON/OFF Program: Up to 99 programs per relay output.

- Simply set the start time and end time by specifying hours, minutes, and seconds.

For example, Start Time 08:00:00 and End Time 12:00:00 are counted as one program, where the relay output starts operating at 08:00:00 and stops operating at 12:00:00.

- Recycle Program: Up to 1 program per relay output.

- Simply set the On Time and Off Time by specifying day, month, and year, and set the Start Time and End Time by specifying hours, minutes, and seconds.

- For example, On Time 1/04/68 and Off Time 30/04/68, with Start Time 08:00:00 and End Time 12:00:00, are counted as one program. The relay output operates from 08:00:00 to 12:00:00 only from 1/04/68 to 30/04/68.

Specific days and date ranges during which the SMW Series will not operate.

Holiday programs can be set to disable relay output operation for up to 30 days.

-Simply specify the day and month. For example, a holiday on the 12th of August each year is counted as one holiday.

Operation[Continue]

• Summer programs can be set to disable relay output operation for multiple consecutive days, up to 10 date ranges.

- Simply set the start date and end date by specifying month and day. For example, a summer period from April 12 to April 16 is counted as one summer program. Relay output can be manually turned ON/OFF by pressing the keypad. In the event of a power failure, the SMW Series clock continues to keep time without the need to reset the time or reprogram operation, due to the built-in battery backup.

Time display can be selected as AM/PM or 24-hour format. Up to 12 weekly patterns can be selected to control relay output operation.

1	MON	TUE	WED	THU	FRI	SAT	SUN
2	MON	TUE	WED	THU	FRI	SAT	
3	MON	TUE	WED	THU	FRI		
4						SAT	SUN
5					FRI	SAT	SUN
6	MON						
7		TUE					
8			WED				
8				THU			
10					FRI		
11						SAT	
12							SUN

Wiring Diagram

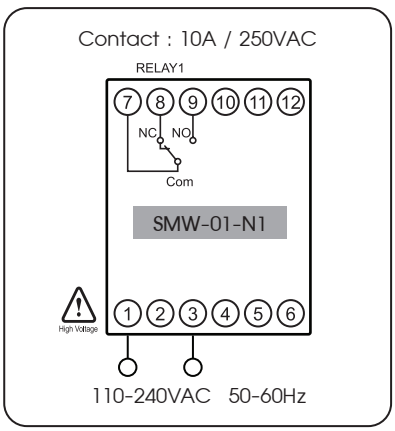

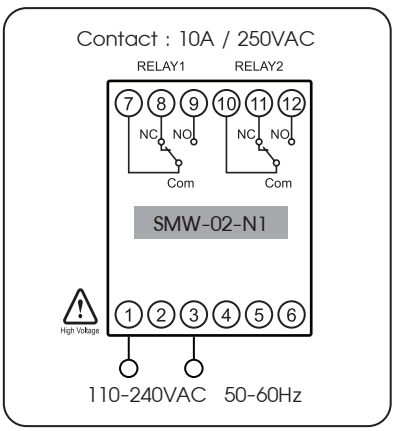

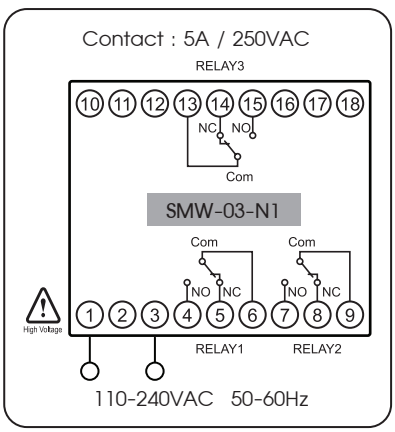

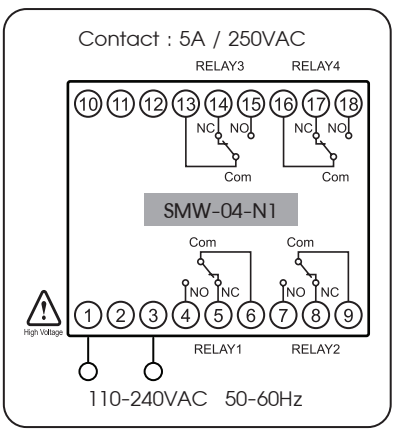

Dimension

• SMW-01-N1, SMW-02-N1

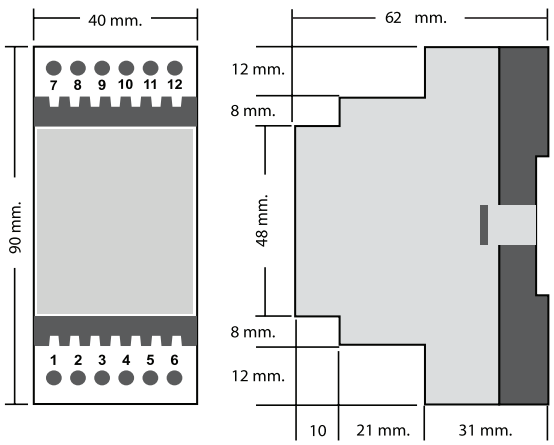

• SMW-03-N1, SMW-04-N1

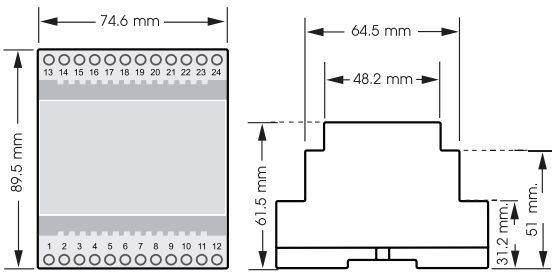

Ordering Code

SMW - [ ] -N1

Channel	
01	1 Channel
02	2 Channel
03	3 Channel
04	4 Channel