PM-021N-T

TRANSFER PUMP CONTROLLER

PRIMUS

CE



PM-021N-T2



PM-021N-T3

Specification

Model		PM-021N-T2	PM-021N-T3
Power Supply		90-250VAC 50/60Hz	
Display		LED Status, Size 3mm.	
Power Consumption		3VA	
Input Analog Overload	Voltage Range	100-250VAC	
Input Analog Sensitive	Water Well	Level Low, Hi, Overflow	
	Water Tank	Level Low, Min, Hi, Overflow	
Input Digital Switch	Reset Alarm	External Dry Contact	
	Flow Switch	External Dry Contact 2 Channels	
Input DIP Switch	Pump Enable	2 Channels	3 Channels
	Delay Flow Switch	60/180 Seconds.	
	Delay On Pump	0/5 Seconds.	
	Delay Sequence Pump	1/3 Hours	
	Address ID Modbus RTU	ID 1-15	
Output Pump	Channel	2 Channels	3 Channels
	Relay Contact	250 VAC/4A, 30 VDC/4A	
Output Status	Contant Status	Alarm, Water well(Lo, Hi), Water Tank(Lo, Hi), Dryrun	
	Relay Contact	250VAC/2A, 30VDC/2A	
Communi-cation	Protocol	Modbus RTU	
	Baud Rate	9600, 19200, 38400, 57600 bps.	
	Parity	None, Even, Odd	
	Stop Bit	1,2	
	Data Bits	8	
Ambient Operation	Temperatune	-10°C to 60°C	
	Humidiy	<85 % RH Non-Condensing	
Ambient Storage	Temperatune	-20°C to 80°C	
	Humidiy	<85 % RH Non-Condensing	
Protection Degree		IP20	
Installation		DIN RAIL Maunting	
Material		ABS-V0	
Size (mm.)		105 x 90 x 61.5	
Weight (kg.)		350	358

Description

- Transfer Pump Controller: PM-021N-T is a Transfer Pump Controller for controlling the operation of 2 to 4 water pumps.
- Can check water levels for Water Well (3 levels) and Water Tank (4 levels) for use.
- Level sensors supported: Electrode / Float Switch / Pressure Switch.
- Has Latching Function with Memory to store values during power failure for alternating the operation of each pump.
- Has DIP Switch to disconnect a pump from the system in case one pump is faulty or overloaded, and allow another pump to operate instead.
- Has Reinforce Operation to increase the number of operating pumps when the water level in the system drops significantly.
- Alarm Output for various abnormalities.
- Over and Under Voltage Protection: the controller will stop operating if the supply voltage is outside the set range (for models with Voltage Protection).
- 3 Phase System: Over and Under Voltage, Phase Sequence, Phase Loss, range 80–120% of nominal voltage.
- RS-485 Modbus RTU Protocol communication for connection to a computer.
- Has a delay time to allow the pump to operate for at least 0 or 5 seconds to prevent frequent on/off switching.
- Has a continuous operation time limit of 1 or 3 hours (to prevent one pump from operating too long by switching to another pump).
- Has Flow Switch input to check water flow in the system to prevent Dry Run.
- Has Overload input: when any pump is overloaded, that pump is disconnected from the system and bypassed so another pump can operate instead.
- LED indicators show the status of Output, Level, and Alarm.
- LED indicators show the status of Level Sensor Fault.

Operation

PM-021N-T is a device that can control water pumps to draw water from the Water Well and deliver it to the Water Tank. There are 2 models available: the 2-pump model and the 3-pump model. The operation alternates each pump so that the operating hours of each pump are close to each other.

In addition, there is an additional function, Voltage Protection, to detect abnormalities of the supply voltage, which can cause pump damage. This applies to models PM-021N-T-2-3 and PM-021N-T-3-3. The operation of the Voltage Protection is as follows.

Operation [Continue]

Operation of Voltage Protection

3-Phase, Over and Under Voltage, Phase Sequence and Phase Loss: When the voltage is in a normal condition, that is, between the set Lower Limit and Upper Limit, the phase sequence is correct and all phases (R, S, T) are present, the Relay Output will turn ON and command the pump to operate. But if the voltage is lower than the Lower Limit or higher than the Upper Limit, or the phase sequence is incorrect, or not all phases are present (Phase Loss), before the load operates the Relay Output will turn OFF, and the LED will display the voltage abnormal status.

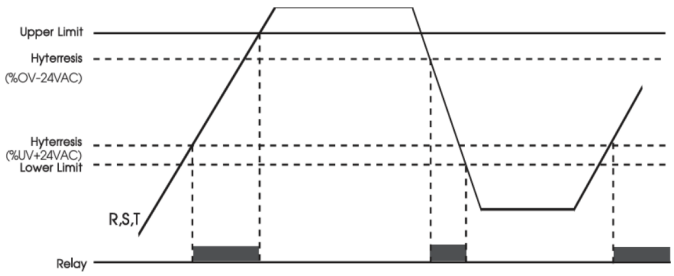

Operation in 3 Phase Under and Over Voltage Protection mode

PM-021N-T can be connected to Level Sensor both Electrode and Float Switch to check the water level in the Water Well at 3 levels: Low (L), High (H), and Over Flow (OF).

Operation of Transfer Pump Controller

The pump will operate when the water level in the Water Well is at High (H) to Low (L) level, but will stop operating when the water level is lower than Low (L). After that, the pump can operate again only when the water level in the tank increases to High (H) level again.

Every time the pump starts operating, the Flow Switch will check the water flow in the system after a delay time of 60 or 180 seconds. If ON, it shows that there is no water in the system. The pump will stop operating to prevent Dry Run.

Operation of Sensor Fault (S.F)

The system will detect the input of the Sensor Probe. In the case that the probe that is higher, such as Probe H, operates before Probe L, the system will command the Alarm Output to operate.

Operation of PM-021N-T-2

It is an equipment that controls 2 pumps to transfer water from the lower water tank (Water Well) to the upper water tank (Water Tank) by installing Electrode/Float Switch with 4 levels: Low (L), Min (M), High (H), and Over Flow (OF) connected to the upper water tank (Water Tank) to operate in the following order:

When the water in the Water Tank decreases to Probe M level of the Electrode, it causes the output of Pump 1 to operate and commands pump No. to operate. After pump No.1 operates, it will cause the water level in the Water Tank to increase until the Probe H level of the Electrode, causing the output of Pump 1 to stop operating and command the pump to stop operating as well.

When the water in the Water Tank decreases again to the Probe M level of the Electrode, it will switch the output of Pump 2 to operate and command pump No.2 to operate. After pump No.2 operates, it will cause the water level in the Water Tank to increase until the Probe H level of the Electrode, causing the output of Pump 2 to stop operating and command the pump to stop operating as well. Both pumps will alternate operating continuously according to the water level that increases and decreases.

Reinforce Operation

In the case that one pump is already operating (main pump), but the water level still decreases to the Probe L level of the Electrode, it will cause the other pump to operate additionally to operate together. And when the water level in the Water Tank increases to the Probe H level of the Electrode, all pumps will stop operating.

Operation of PM-021N-T-3

It is an equipment that controls 3 pumps to transfer water from the lower water tank (Water Well) to the upper water tank (Water Tank) by installing Electrode/Float Switch with 4 levels: Low (L), Min (M), High (H), and Over Flow (OF) connected to the upper water tank (Water Tank) to operate in the following order:

When the water in the Water Tank decreases to the Probe M level of the Electrode, it causes the output of Pump 1 to operate and commands pump No.1 to operate. After pump No.1 operates, it will cause the water level in the Water Tank to increase until the Probe H level of the Electrode, causing the output of Pump 1 to stop operating and command the pump to stop operating as well.

When the water in the Water Tank decreases again to the Probe M level of the Electrode, it will switch the output of Pump 2 to operate and command pump No.2 to operate. After pump No.2 operates, it will cause the water level in the Water Tank to increase until the Probe H level of the Electrode, causing the output of Pump 2 to stop operating and command the pump to stop operating as well.

When the water in the Water Tank decreases again to the Probe M level of the Electrode, it will switch the output of Pump 3 to operate and command pump No.3 to operate. After pump No.3 operates, it will cause the water level in the Water Tank to increase until the Probe H level of the Electrode, causing the output of Pump 3 to stop operating and command the pump to stop operating as well. All 3 pumps will alternate operating continuously according to the water level that increases and decreases.

Reinforce Operation

In the case that one pump is already operating (main pump), but the water level still decreases to the Probe L level of the Electrode, it will cause another pump to operate additionally to operate together. And when the water level in the Water Tank increases to the Probe H level of the Electrode, all pumps will stop operating.

Case of operating 2 pumps

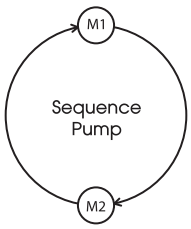

Case of operating 3 pumps

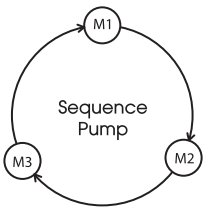

Wiring Diagram

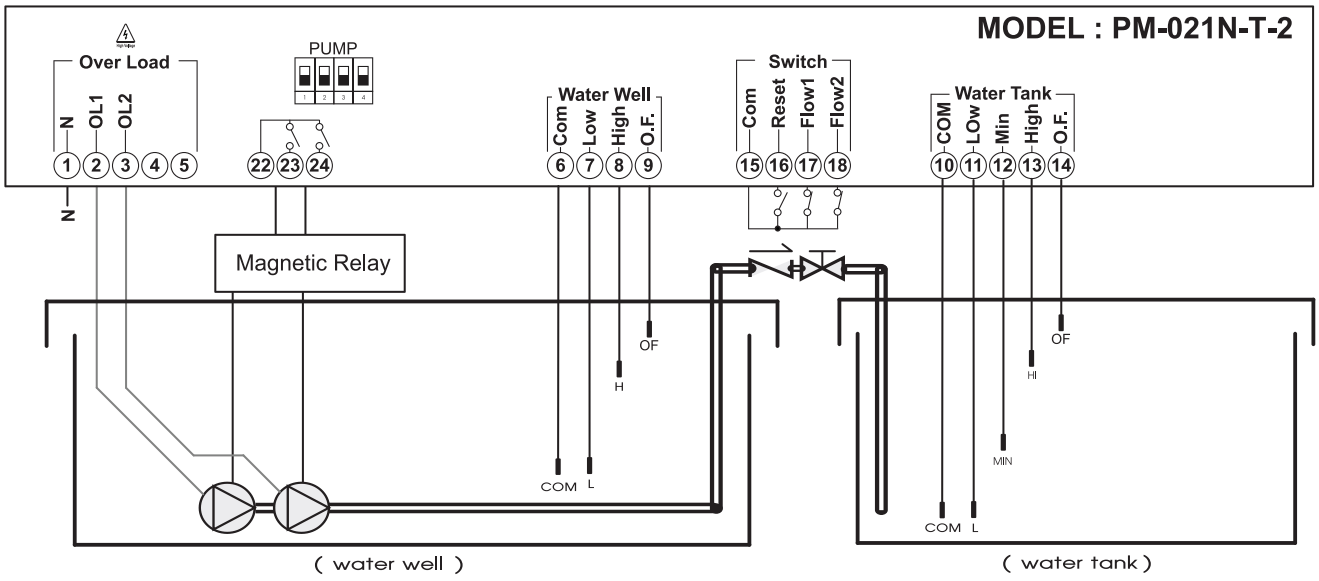

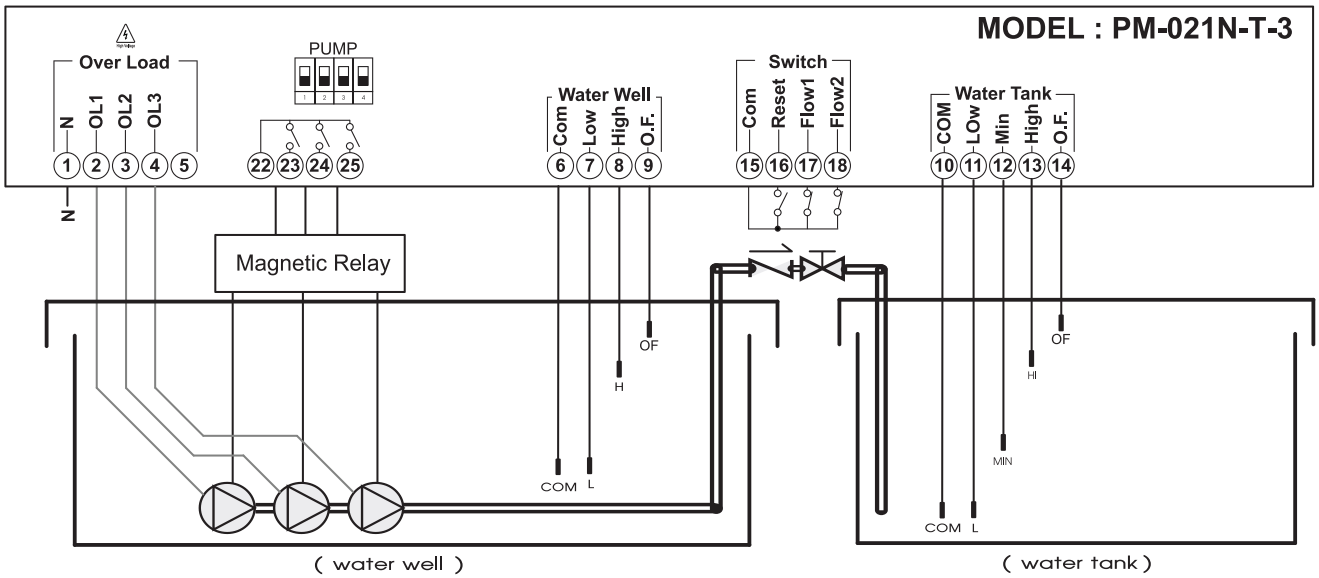

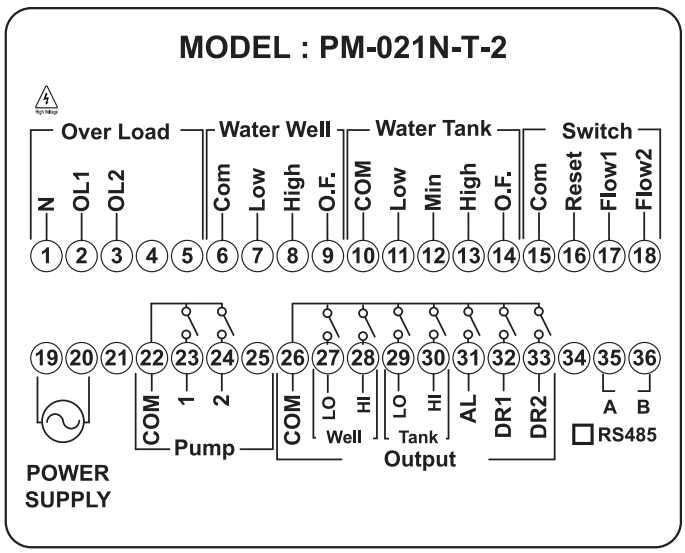

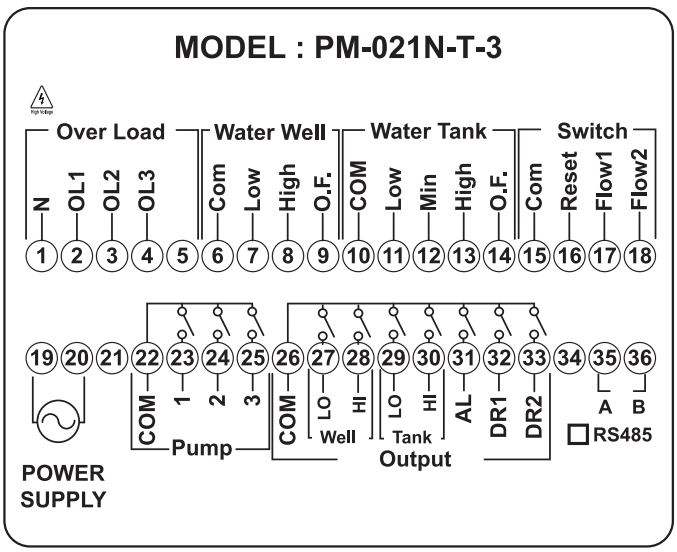

Diamension

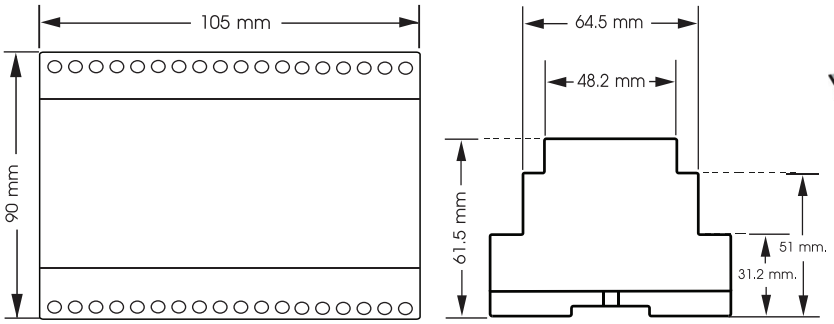

การติดตั้ง

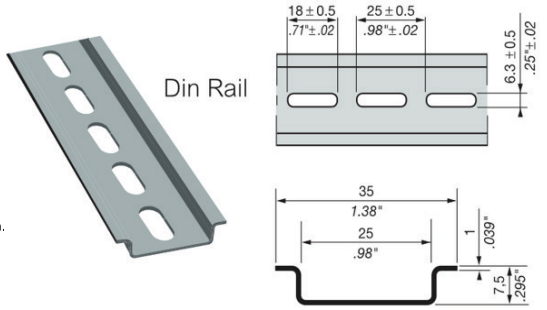

Ordering Code

PM-021N-T [Pump] - [Communication]

Pump	
2	2 Pump
3	3 Pump

Communication	
NONE	NONE
M	RS-485