● PHASE PROTECTION & DRY RUN PROTECTION & ELECTRONIC OVERLOAD

# PM-004

## SPEED RELAY

PRIMUS




Socket



## Description

- Speed Relay : PM-004 is a device for detecting rotation speed exceeding or rotation speed lower than the set value.
- Receive input from sensor devices of type NPN/PNP or NAMUR and Contact.
- 3 speed ranges to choose from, which are 30-300 rpm, 200-2,000 rpm, and 1,000 - 10,000 rpm.
- Delay time during the start period can be set from 1 to 25 seconds.

## Specification

| | | |
|---|---|---|
| Power Supply | | 24, 110, 220VAC ±10% 50-60Hz |
| Power Consumption | | 2.5VA |
| Temperature Operation | | 0-50°C |
| Output | NPN/PNP | 24V/10mA |
| | NAMUR | 8.2V/10mA |
| | Contact | 10V/2mA |
| | Relay Output | 10A/250VAC |
| Range | | 30-300 rpm |
| | | 200-2,000 rpm |
| | | 1,000-10,000 rpm |
| Display | | LED GREEN RELAY ON |
| Installation | | DIN RAIL Mounting |
| Material | | ABS-V0 |
| Size (mm.) | | 80 x 38 x 83.5 |
| Weight (kg.) | | 210 |

## Operation

PM-004 is a relay that will perform the detection of rotation speed by receiving signals from sensor devices of type NPN/PNP or NAMUR and Contact.

When the power supply voltage is provided, Contact Relay will operate immediately in order to make the machine rotate until the normal round with the ability to set the delay time during the starting period from 1 to 25 round When the set time is completed. It will then start detecting the rotation speed. If the rotation speed exceeds the set value, Contact Relay will cut the circuit immediately.

When It need to detect rotation speed lower than the set value, connect terminals 7 and 11 together.

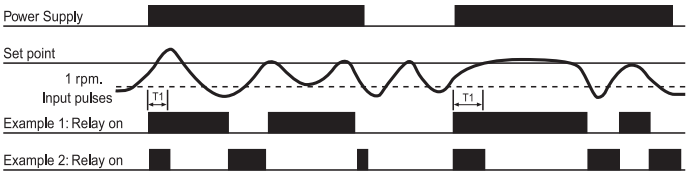


## Size and dimension

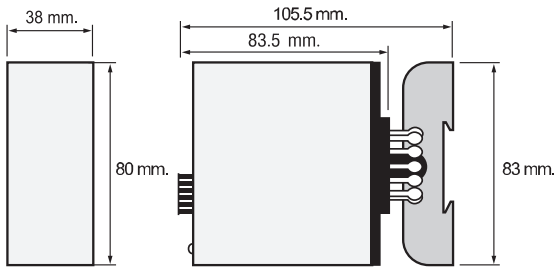


## Wiring Dimension

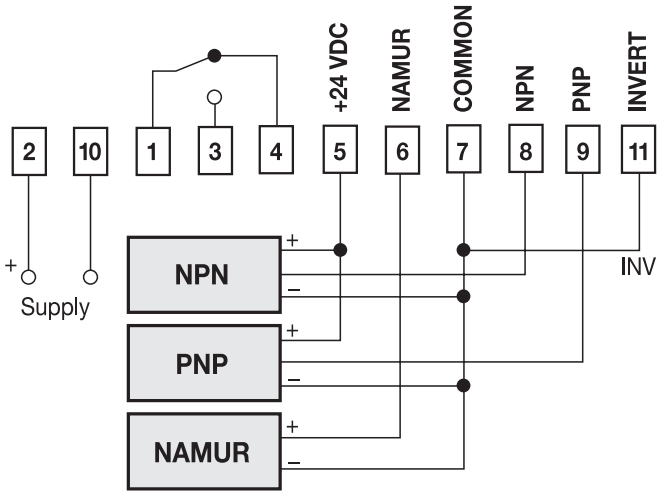


## Ordering Code

PM-004- [ ] - [ ]

| RPM | |
|---|---|
| 003 | 30-300 rpm |
| 020 | 200-2,000 rpm |
| 100 | 1,000-10,000 rpm |

| POWER SUPPLY | |
|---|---|
| 024 | 24 VDC/AC |
| 110 | 110 VDC |
| 220 | 220 VDC |